JESSBERGER pumps and systems

INSTRUCTION MANUAL

JP-16

Manual pump JP-16

The instruction manual is always to be read before commissioning the equipment. No warranty claim will be granted for faults and damage to the equipment arising from insufficient knowledge of the instruction manual.

Table of contents

1. Safety instructions

The device is a state of the art piece of equipment and has been constructed according to recognized safety specifications.It is nevertheless possible that use of the device will present hazards to the operator or to third parties, or may damage the device or other property.It is therefore essential to act in accordance with these safety instructions, and in particular with those sections identified as warnings.

Warning notices and symbols

In the operating manual, the following signs are used for highlighting important information.

! **Special information for economical use of the equipment.**

Special information or “dos and don´ts” for damage prevention.

Information or “dos and don'ts" for the prevention of damage to persons or equipment.

JESSBERGER GmbH
Jaegerweg 5–7
D-85521 Ottobrunn
Germany
Phone: +49 (0) 89 - 66 66 33 400
Fax: +49 (0) 89 - 66 66 33 411
www.jesspumpen.de
info@jesspumpen.de

Appropriate use

The device may only be used if it is in perfect condition, and then only for its intended purpose, in compliance with all safety regulations, with an awareness of the potential risks, and according to the operating manual. Any faults that may impair the safety must be rectified immediately.

The device and its components are only to be used for handling the liquids listed and the purpose described. Using the machine for any other purpose would constitute inappropriate use. The manufacturer is not responsible for any lass arising as a result of this, the risk for this is borne only by the operating company

Organisational measures

This operating manual should always be kept readily available at the site of operation! Each person concerned with the assembly, commissioning, maintenance and operation of the equipment must have read and understood the entire operating manual. It is essential that the type plate and the warning notices attached to the device are observed, and maintained in a fully readable condition.

Qualified personnel

The operating, maintenance and assembly personnel must be appropriately qualified for their work. The areas of responsibility, competences and supervision of the personnel must be precisely regulated by the operating company. If the personnel do not have the required knowledge, they must be trained and instructed. The operating company must also ensure that the contents of the operating manual are properly understood by the personnel.

Waters protection

The device has been designed to handle water hazardous substances. The regulations on the operating place (e.g. Water Resources Act WHG, = ordinance on installations for handling of substances hazardous to water VAwS) must be adhered to.

Hydraulics

Only persons with special knowledge and experience with hydraulic systems may carry out work on hydraulic parts and equipment. All lines, hoses and screw joints should regularly be checked for leaks and visible external damage. Any damage must be rectified immediately. Any oil spurting out can cause injuries and fire.

The relevant safety regulations for the product must be followed when handling oils, greases or other chemical substances!

Electric power

Work on the electrical equipment may only be carried out by a qualified electrician or by trained persons under the guidance and supervision of a qualified electrician according to electro-technical guidelines. Machine or system components, an which inspection, maintenance or repair work is to be carried out must be de-energised.

2 Product description

The JP-16 is a double-action hand pump for pumping the media listed below from barrels, drums and overground storage tanks. The M64 x 4 and G2" threads integrated in the housing enable simple assembly. The JP-16 is available with two different suction pipes.

2.1 Product versions

JP-16 with suction pipe for immersion depths of 840 mm, fits to 200 l upright drums.

JP-16 with telescopic suction pipe for immersion depths between 470 and 925 mm.

JP-16 Kit with telescopic suction pipe for immersion depths of 470 mm to 925 mm with hose fitting, 1.5 m DN 19 x 4, incl. outlet elbow AK 20 and bend protect spring (approved for use in areas at risk of explosion)

2.2 Permitted media

The JP-16 may be operated with the following media (hazard classes A I - III): Diesel, heating oil EL/L, fuels, petroleum, antifreeze (undiluted),low viscosity mineral oils and RME.

JESSBERGER pumps and systems

2.3 Technical data

Pump dimensions:	Height app. 257 mm	Diameter app. 92 mm
Immersion depth:	Stiff suction pipe 840 mm	Telescopic suction pipe 470 - 925 mm
Barrel connection:	Thread	M64X4/G2"
Pump type:	Single-acting reciprocating piston pump	
Pumping capacity:	app. 0.25 l/stroke	
Permissible ambient temperature:	-20°C up to +40°C	
Permissible media temperature:	Depends on medium (hazard class AI to AIII); min. -20°C, max. +40°C	

2.4 Environment

The hand pump JP-16 is approved for use in explosive areas **Ex II 2/2G c IIA T3.**

- **Make sure that all components required for the environment in which the pump will be used are approved.**

2.5 Accessories

- Potential equalisation cable 2 m
- FT 26 filter for JP-16 with telescopic pipe
- FT 20 filter for JP-16
- Hose fittings 1.5 m DN 19 x 4, with outlet elbow AK 20 and anti-kink spring approved for use in explosive areas
- Hose fittings 1.5 m DN 19 X 4,elec. conductive (hazard class A I - III), with outlet elbow AK 20 and anti-kink spring
- Hose fittings 1.5 m DN 19 x 4, elec. conductive (hazard class A I - III), with outlet valve AV 20 and anti-kink spring
- Hose fittings 1.5 m DN 19 x 4, LZ19 with insert, elec. conductive (hazard class A I - III), with outlet valve AV 20 and anti-kink spring, RME-resistant

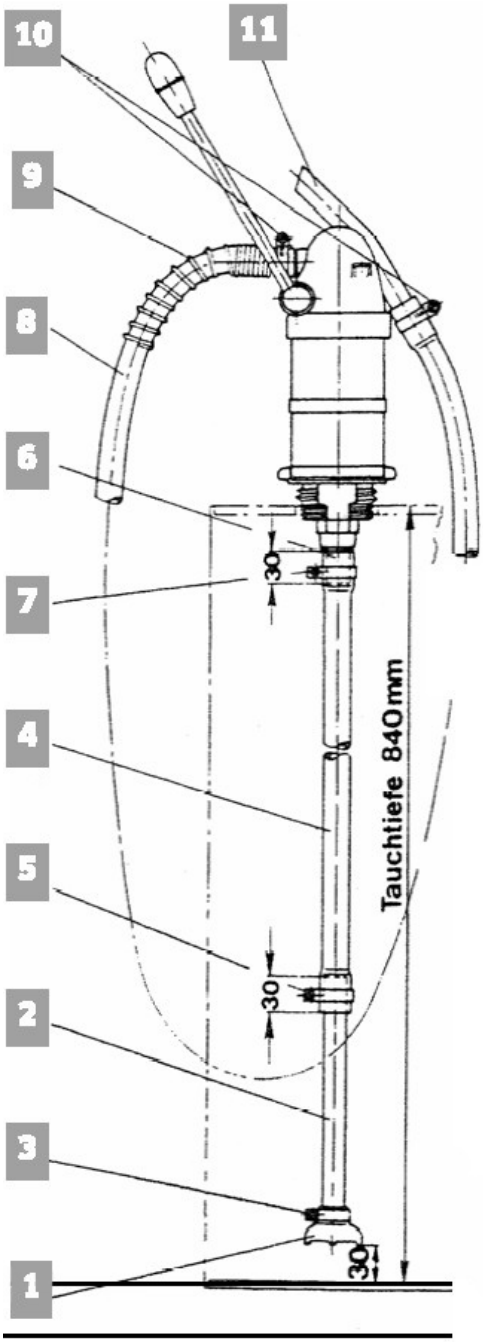

3. Assembly

Remove completely the packing material, and you obey then the instruction for assembly:

3.1 Assembly instructions

Suction connection

- Screw suction tube (4) in suction face of the pump pivot. (6)
- Optional: Place suction filter (1) on suction pipe (2) and fix with hose clamp (3). (Suction filter (1) and hose clamp (3) are optional accessories)

Pressure connection

- Place Hose clamp (10) and break protection spring on black pressure hose (8) and push it onto the female connector of the pump. Fix spring with bent wire (9) and hose clamp (10). Secure hose by tightening the bolt on the hose clamp.
- Screw the pump onto the upright barrel.
- Optional: screw potential equalisation cable tightly to the pump.
- **If the pump is to be used in areas at risk of explosion, it is compulsory that a potential compensation cable is used.**

!
- **Operation without filter is not permitted. An exception may only be made when it has been ensured that only clean media will be delivered.**

3.2 Securing against unauthorised use

The pump lever can be locked to the pump head with a conventional padlock (the lock is not included in the scope of supply).

JESSBERGER pumps and systems

4 Operation

During use in potentially explosive areas, every pump and container should be earthed prior to commissioning or provided with a potential equalisation between themselves and earthed altogether.

The potential equalisation of the pump can take place with the potential equalisation cable, which is available as an accessory. Attention should be paid to a highly conductive transition at the connection points of the potential equalisation cable.

4.1 Commissioning

Place the outlet pipe into a tank or other suitable container. Move the lever backwards and forwards until medium emerges from the outlet pipe.

!

- **Operation without filter is not permitted. An exception may only be made when it has been ensured that only clean media will be delivered.**
- **Make sure that the pump does not become hot when sucking - danger of explosion.**
- **Make sure that no inadmissible heated up media are pumped-danger of explosion.**
- **Continuous dry running cause the damage of the pump**

4.2 Normal operation

- **Make sure that no inadmissible heated up media are pumped-danger of explosion.**
- **Continuousdry runningcan cause the damageof the pump.**
- **Move the lever backwards and forwards until the desired quantity has been pumped out**

5 Maintenance

– As soon as the pumped quantity falls oft noticeably, check the filter in the suction pipe and clean it if necessary.

– Regularly check for leaks at the discharge hose and at the connecting elements. Faulty seals or hoses must be exchanged immediately.

6 Disposal

The device is to be emptied completely and the liquids properly disposed of in case it is taken out of service. The equipment is to be disposed of properly when taken permanently out of service: Return old metal, plastic parts and electronic waste for recycling.

The water legal regulations are to be followed.

7 Spare parts

1	Top part
2	Complete cylinder; consisting of cylinder item 2 and steel ball and set pin
3	Piston; see also item 100, piston complete
4	Valve plate
5	Shaft
6	Rocker arm assembly with rivet and connecting rod
7	Gudgeon pin
8	Hand lever
10	**Caution** Not available separately! Items 10 and 10a are part of the rocker arm assembly item 6
13	Spring
15	Circlip D 8x0.8 DIN 471steel
16	Sealing ring D.65x74x2
17	Sealing cord 4x4x195 Ramilon- see also item 110, sealing cord sold by the metre
18	O-Ring D.15.5x3 Perbunan petrol resistant
19	Handle
20	Washer 0.6.4 DIN 433 St. galvanised
21	Split pin D.1.6x10 DIN 94 St. galvanised
100	Piston assembly consisting of: Item 3, 4, 7, 13, 15, 17, 20, 21
110	Pack Ramilon 4x4
120	O-Ring D.14x2.5 Perbunan for telescopic suction pipe TR 1/1
130	O-Ring D.17.3x2.4 FKM for telescopic suction pipe TR 2/1+TR2/2. The seal set for JP-16 consists of: 1 off item 16, 1 off item 17, 1 off item 18